1. INTRODUCTION

This installation Manual contains essential information for the electrical and mechanical installation that your must know before installing PERLIGHT PV modules. This also contains safety information you need to be familiar with .All the information described in this manual are the intellectual property of PERLIGHT and based on the technologies and experiences that have been acquired and accumulated in the long history of PERLIGHT. This document does not constitute a warranty, expressed or implied.

PERLIGHT does not assume responsibility and expressly disclaims liability for loss, damage, or expense arising out of in anyway connected with installation, operation, use or maintenance of the PV modules. No responsibility is assumed by PERLIGHT for any infringement of patents or other rights of third parties that may result from use of PV module.

PERLIGHT reserves the right to make changes to the product, specifications or installation manual without prior notice.

2. GENERAL INFORMATION

(INCLUDING WARING AND SAFETY)

The installation of PV modules requires a great degree of skill and should only be performed by a qualified licensed professional, including licensed contractors and licensed electricians. Please be aware that there is a serious risk of various types of injury occurring during the installation including the risk of electric shock. All PERLIGHT modules are equipped with a permanently attached junction terminal box that will accept variety of wiring applications or with a special cable assembly for ease of installation, and they do not require assembly.

<GENERAL WARNING>

1. Before you attempt to install wire, operate and maintain the PV module, please make sure that you completely understand the information described in this installation manual.
2. Contact with electrically active parts of a PV module such as terminals can result in burns, sparks and lethal shock whether the PV modules is connected or not.
3. PV modules produce electricity when the sufficient sunlight or other sources illuminate the module surface. When the modules are connected in series, voltage id cumulative . When the modules are connected in parallel, current is cumulative. As a result, a large-scale PV system can produce high voltage and current which could present an increased hazard and may cause serious injury or death.
4. Do not connect the PV modules directly to the loads such as motor since the variation of the output power depending on the solar irradiation cause damage for the connected motor.

   1:In the case of a blushless motor, the lock function becomes active and the hall IC is most likely to be damaged.

   2:In the case of a brush type motor, the coil is most likely to be damaged.

<WORK PRINCIPLE>

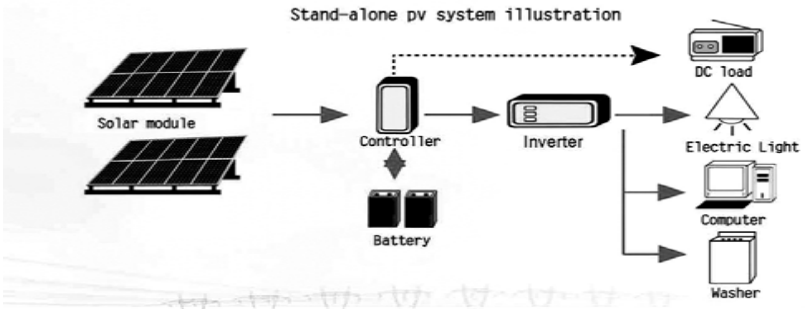

<GENERAL SAFETY>

1. Consult local codes and other applicable laws concerning required permits on regulations concerning installation and inspection requirements.
2. Before installation a PV module, contact appropriate authorities to determine permit, installation and inspection requirements that should be followed.
3. Install PV modules and ground frames in accordance with applicable rules and

regulations

4. PV modules should be installed and maintained by qualified personnel. Only installer/service personnel should have access to the PV module installation site.
5. No matter where the PV modules are installed, either roof mounted construction or any other type of structures above the ground, appropriate safety practices should be followed and required safety equipment should be used in order to avoid possible safety hazards. Note that the installation of some PV modules on roofs may require the addition of fireproofing, depending on local building / fire codes.
6. Please use PV modules with same cell size within series.
7. Follow all safety precautions of other components used in the system.
8. In order to avoid a risk of injury or electrical shock, do not allow anyone to approach the PV module if the person has little knowledge on PV module or on the measures that should be taken when PV modules are damaged.
9. Do not clean the glass surface with chemicals. Do not let water stay on the glass surface of PV modules for a long time. This creates a risk of white efflorescence(glass disease) which may result in the deterioration of energy generation.
10. Do not clean the glass surface with chemicals. Do not let water stay on the glass surface of PV modules for a long time. This creates a risk of white efflorescence (glass disease) which may result in the deterioration of energy generation.
11. Do not install the PV module horizontally. It may cause dirt or white efflorescence (glass disease) due to water.
12. Do not cover the water drain holes of the frame. There is a risk of frost damage when the frame is filled with water copulation.
13. When sliding snow load has to be considered, an appropriate measure has to be taken so that PV module frames on lower edge of PV modules will not be damaged.
14. Do not expose PV module to sunlight concentrated with mirrors, lenses or similar means.
15. Turn off inverters and circuit breakers immediately, should a problem occur.
16. In case the glass surface of a PV module is broken, wear goggles and tape the glass to keep the broken pieces in place.
17. A defective PV module may generate power ever if it is removed from the system. It may be dangerous to handle the PV module while exposed to sunlight. Place a defective PV module in a carton so PV cells are completely shaded.
18. In case of series connection , the maximum open circuit voltage must not be greater than the specified maximum system voltage. The voltage is proportional to the number of series. In case of parallel connection, please be sure to take proper measure to block the reverse current flow. The current may easily flow in a reverse direction.

<HANDLING SAFETY>

1. Do not cause an excessive load on the surface of PV module or twist the frame. The glass surface can easily break.
2. Do not stand or step on the PV module. The surface glass of PV module is slippery.
3. Do not hit or put excessive load on the glass or brake film. The PV cell is very thin and can be easily broken.
4. Do not scratch or hit at the back film. The back film is vulnerable.
5. Do not hit the terminal box or do not pull the cables. The terminal box can crack and break.
6. Never touch terminal box or the end of output cables with bare hands when the PV module is irradiated. Cover the surface of PV module with cloth or other suitable sufficiently opaque material to isolate the PV module from incident light and handle the wires with rubber-gloved hands to avoid electric shock.
7. Do not scratch the output cable or bend it with force. The insulation of output cable

can break and may result in electricity leakage or shock.

8. Do not pull the output cable excessively. The output cable may unplug and cause electricity leakage or shock.
9. Do not drill holes in the frame. It may compromise the frame strength and cause corrosion of the frame.
10. Do not scratch the insulation coating of the frame(except for grounding connection).It may cause corrosion of the frame or compromise the framework strength.
11. Do not loosen or remove the screws of the PV module. It may compromise the joint strength of PV module and cause corrosion.
12. Do not touch the PV module with bare hands. The frame of PV modules has sharp edges and may cause injury.
13. Do not drop PV module or allow objects to fall down on the PV module.
14. Do not try artificially to concentrate sunlight on the PV module.

<INSTALLATION SAFETY>

1. Always wear protective head gear, insulating gloves and safety shoes (with rubber soles).
2. Keep the PV module packed in the carton until installation.
3. Do not touch the PV module unnecessarily during installation. The glass surface and the frames get hot. There is a risk of burn, or you may collapse because of electric shock.
4. Do not work under rain, snow or windy conditions.
5. Use insulated tools
6. Do not use wet tools
7. Do not drop tools or hard objects on PV modules
8. When installing PV modules far above ground, do not drop any object(e.g. PV module or tools).
9. Make sure flammable gases are not generated near the installation site.
10. Completely cover the PV module surface with an opaque material during PV module installation and wiring.
11. Plug in the connector tight and ensure the wiring work.
12. Due to the risk of electrical shock, do not perform any work if the terminals of PV module are wet.
13. Do not touch the terminal box and the end of output cable ends (connectors) with bare hands during installation or under sunlight, regardless of whether the PV module is connected to or disconnected from the system.
14. Do not unplug the connector if the system circuit is connected to a load.
15. Do not stamp on the glass at work. There is a risk of injury or electric shock if glass is broken.
16. Do not work alone (always work as a team of 2 or more people).
17. Wear a safety belt if working far above the ground.
18. Do not wear metallic jewelry which can cause electric shock during installation.
19. Do not damage the surrounding PV modules or mounting structure when replacing a PV module.
20. Bind cables by the insulation locks. Drooping down of cables from the terminal box could possibly cause various problems such as animal biting electricity leakage in puddle.

3.COMPONENTS

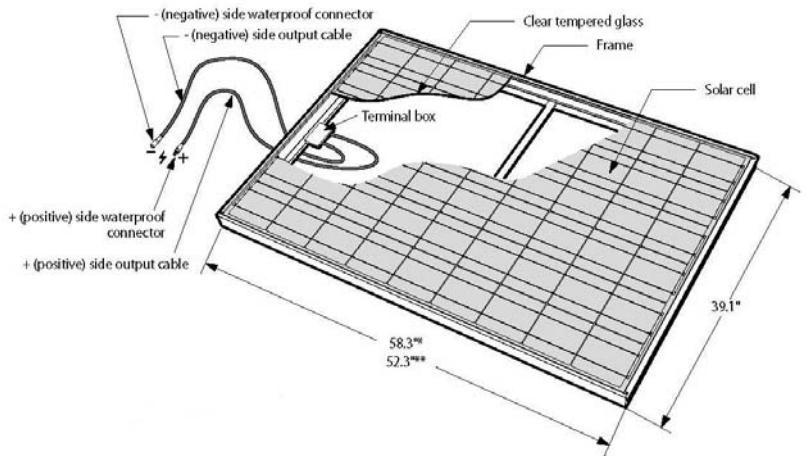

4. SITE SELECTION

In most applications, the PV modules should be installed in location where there is no shading throughout the year. In the Northern Hemisphere, The PV modules should typically face south, and in the Southern Hemisphere, the PV modules should typically face north. Please make sure that there are no obstruction in the surroundings of the site of installation. Take proper steps in order to maintain reliability and safety, in case the PV modules are used in areas such as: Heavy snow areas/Extremely code areas/ Strong wind areas/Installation over, or near, water/ Areas where installations are prone to salt water damage (*)/Small islands or desert areas.(*)

If you are planning to use the PV modules where the salt water damage may be possible consult with PERLIGHT local agent first to determine an appropriate installation method, or to determine whether the installation is possible?

5. TILT ANGLE

The title angle of the PV module is the measured between the PV module and a horizontal ground surface. The PV module generates the maximum output power when it faces the sun directly.

For the standalone systems with a battery where the PV modules are attached to a permanent structure , the tile angle of the PV modules should be determined to optimize the performance when the sunlight is the scarcest. In general, if the electric power generation is adequate when the sunlight is the scarcest, then the angle chosen should be adequate during the rest of the year. For grid-connected installations where the PV modules are attached to a permanent structure, it is recommended to tilt the PV module at the angle equal to the latitude of the installation site so that the power generation from the PV module will be optimum throughout the year.

6. WIRING

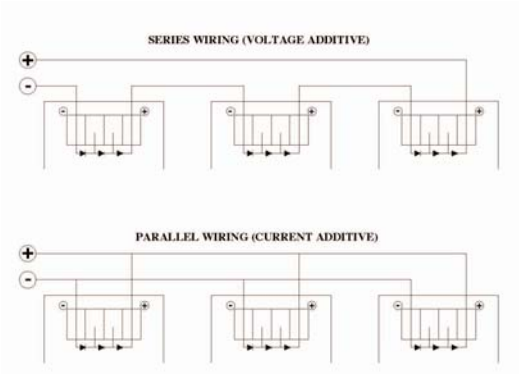

To ensure proper system operation to maintain your warranty, observe the correct cable connection polarity(Figures 1&2) when connecting the modules to a battery or to other modules. If not connected correctly, the bypass diode could be destroyed.

PV modules can be wired in series to increase voltage. Connect wires from the positive terminal of one module to the negative of the next module. Figure shows modules connected in series .

7. INSTALLATION

Refer to installation manual of individual models of PV module.

8.ELECTRICAL RATINGS

Refer to installation manual of individual models of PV module.

9. GROUDING

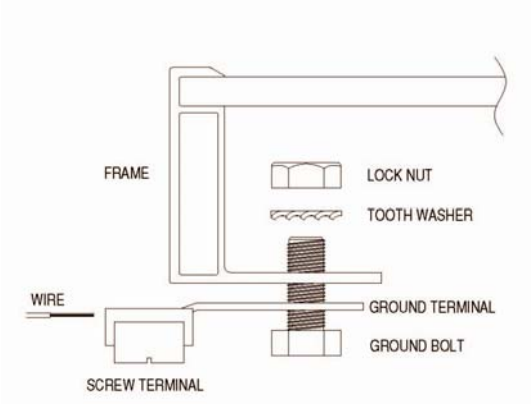

All PV models must be grounded by electrical connection of the module frames to ground. Please be careful in arranging the system ground so that the removal of one module from the circuit will not interrupt the grounding of any other modules.

The modules should be grounded to the same electrical point as described below.

Each PV module has a hole on the side frame of either a bolt, nut and washer grounding the module to the frame, a ground lug fastened by bolt or screw, or appropriate screw(hardware not provided).An example of acceptable ground connection using a bolt, nut and washer retaining a ground lug is shown in figure 3,in a connection of this type, the hardware(such as a toothed locked washer/star washer) must score the frame surface to make positive electrical contact with the frame. The ground wire must be considered within the requirement of local and regulation at the site of installation.

10.MOUNTING

Please make sure that all the information described in the installation manual is still valid and proper for your installation. The mounting method has been verified by PERLIGHT and NOT CERTIFIED by a third party organization.

The approved way to mount PERLIGHT PV modules to a support structure is using the bolt holes provided as described in the Specifications. Although PERLIGHT does not specify or warrant frame clips or clamps, using frame clips (not provided) or clamps module (not provided) is also possible when they are designed for PV modules and with minimum dimensions on the sides of the module in accordance with the instructions and drawings provided. If using frame clips or clamps, the modules should be fixed rigidly and there shall be no damage to the modules by deforming mounting structure against design load. PERLIGHT does not specify or warrant frame clips. The PERLIGHT module warranty may be void if customer-selected trame clips which are improper or inadequate with respect to the module properties(including strength or material)or installation. Note that if metal clips are used, there must be a path to ground from the clips.(for instance, using star washers in the clip hardware set). Please review the descriptions and drawings carefully; not mounting the modules according to one of these methods may void your warranty. These mounting methods are designed to allow module loading of 2400pa.

11.MAINTENANCE

The modules are designed for long life require very little maintenance. If the angle of the PV module is 5degrees or more, normal rainfall is sufficient to keep the module glass surface clean under most weather conditions. If dirt build-up become excessive, clean the glass surface only with a soft cloth using water. If cleaning the back of the module is required, take utmost care not to damage the back side materials. In order to ensure the operation of the system, please check the connection of wiring and the state of the jacket of wires every now and then.